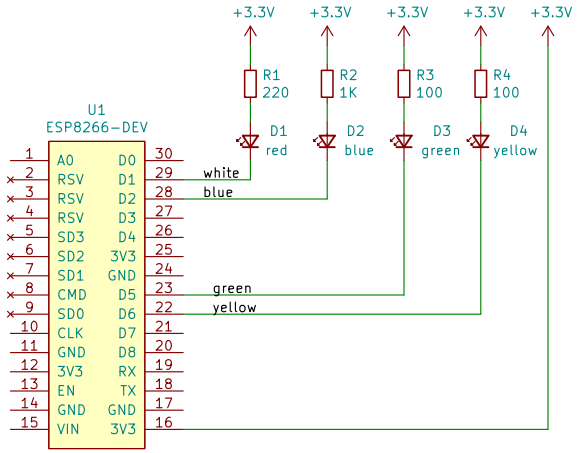

Sheet: /
File: display.sch

Title: Livingroom Display

Size: USLetter	Date: 2020-06-30	**Rev: 1.0**
KiCad E.D.A. kicad 5.1.6		Id: 1/1